Map Book 48 Page 13 A

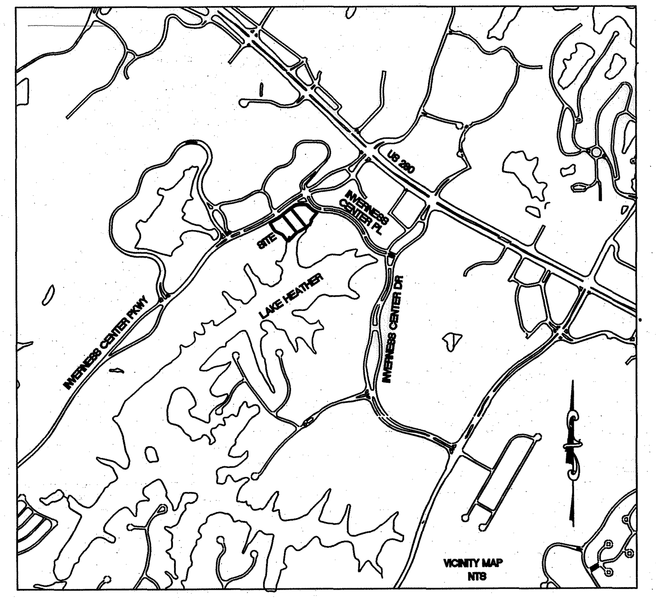

PHASE 1
BUILDING 23 DETAIL

UNIT 200
4,881 SQ.FT+-

UPPER FLOOR
F.F.E. 520.88

UNIT 100 2,034 SQ.FT+- | UNIT 150 2,745 SQ.FT+-

LOWER FLOOR
F.F.E. 509.10

BUILDING 23 DATA
TOTAL SQUARE FEET
9,660 Sq. Ft.

PARKING SPACES
134 REGULAR
5 HANDICAP
139 TOTAL SPACES

OWNER:
BYROM BUILDING CORPORATION
2526 VALLEYDALE ROAD
HOOVER, AL 35244
(205) 980-7424
CONTACT: MARTY BYROM

SURVEYOR:
ENGINEERING DESIGN GROUP LLC
120 BISHOP CIRCLE SUITE 300
PELHAM, ALABAMA 35124
(205)-403-9158
CONTACT: RODNEY CUNNINGHAM, P.L.S.

ARCHITECT:
CHARLES F. SMITH ARCHITECT DESIGN FIRM
3036 CAHABA CLIFFS DR.
BIRMINGHAM, AL 35243
(205) 933-8481

20170718000256120 1/3 $57.00
Shelby Cnty Judge of Probate, AL
07/18/2017 09:05:15 AM FILED/CERT

LAKE HEATHER OFFICES AT INVERNESS PHASE 1

AN OFFICE CONDOMINIUM DEVELOPMENT

SITUATED ON LOT 1A, ACCORDING TO THE RESURVEY OF INVERNESS OFFICE CENTER SITE - 8, AS RECORDED IN MAP BOOK 47, PAGE 76.

THE NORTHWEST 1/4 OF THE SOUTHWEST 1/4 OF SECTION 36, TOWNSHIP 18 SOUTH, RANGE 2 WEST, SHELBY COUNTY, ALABAMA

CURVE	ARC LENGTH	RADIUS	DELTA ANGLE	CHORD BEARING	CHORD LENGTH
C1	17.20'	249.99'	3°36'33"	S 66°10'33" E	17.20'
C2	87.00'	225.00'	22°09'17"	S 53°01'11" E	86.46'
C3	46.87'	56.00'	47°57'30"	N 62°59'31" W	45.52'
C4	67.97'	108.50'	35°53'36"	N 72°04'56" E	66.86'
C5	60.71'	1231.50'	2°49'29"	N 52°40'11" E	60.71'
C6	10.67'	64.00'	9°33'04"	S 55°54'04" W	10.66'

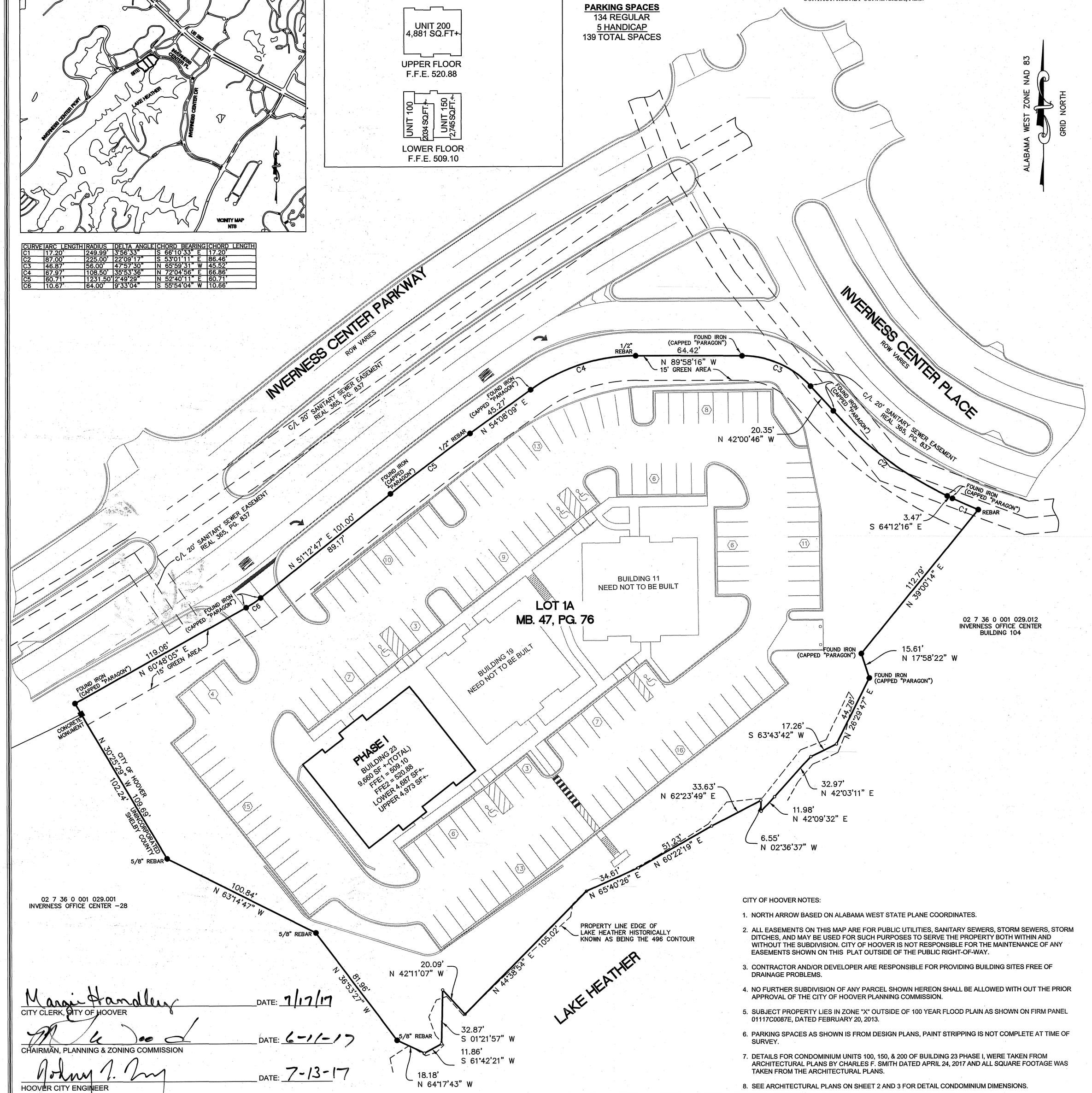

STATE OF ALABAMA
COUNTY OF JEFFERSON

I, THE UNDERSIGNED RODNEY K. CUNNINGHAM, A REGISTERED LAND SURVEYOR IN THE STATE OF ALABAMA HEREBY CERTIFY THAT THIS PLAN SHOWS THE LAYOUT, LOCATION, UNIT NUMBERS AND THE IMPROVEMENTS FORMING A PART OF THE CONDOMINIUM. I FURTHER CERTIFY THAT THIS PLAN SHOWS THE DIMENSIONS OF THE IMPROVEMENTS AND THE UNITS "AS-BUILT" AND THAT THE IMPROVEMENTS SHOWN ON THE PLAN ARE COMPLETE. I FURTHER CERTIFY THAT IN PLANS CONTAINS ALL OF THE INFORMATION REQUIRED 35-8A-209, CODE OF ALABAMA (1975).

I, FURTHER CERTIFY THAT SAID CONDOMINIUM IS CURRENTLY LOCATED IN FLOOD ZONE X OUTSIDE ANY SPECIAL FLOOD HAZARD AREA ACCORDING TO THE FLOOD MAP PREPARED BY THE U.S. DEPARTMENT OF FEMA. THIS CERTIFICATION IS INTENDED TO BE PART OF THE PLANS AND DECLARATION OF LAKE HEATHER OFFICE CONDOMINIUM IN HOOVER, ALABAMA, WITH ALL LEGAL DESCRIPTION CONTAINED THEREIN INCORPORATED AS IF STATED IN FULL HEREIN AND IS PREPARED FOR RECORDATION IN THE CONDOMINIUM BOOK IN THE OFFICE OF THE JUDGE OF PROBATE OF JEFFERSON COUNTY, ALABAMA.

SURVEYOR:
July 13, 2017
RODNEY K. CUNNINGHAM
ALABAMA LIC. NO:26013

ALABAMA REGISTERED No. 26013 PROFESSIONAL LAND SURVEYOR RODNEY KEITH CUNNINGHAM

STATE OF ALABAMA
COUNTY OF SHELBY

I, Lisa N. Lindsey, A NOTARY PUBLIC IN AND FOR SAID COUNTY, IN SAID STATE, HEREBY CERTIFY THAT RODNEY K. CUNNINGHAM, WHOSE NAME IS SIGNED TO THE FOREGOING CERTIFICATE AS SURVEYOR, AND WHO IS KNOWN TO ME, ACKNOWLEDGE BEFORE ME ON THIS DATE THAT BEING DULY INFORMED OF THE CONTENTS OF SAID CERTIFICATE, HE EXECUTED THE SAME VOLUNTARILY, FOR AND AS THE ACT OF SAID CORPORATION.

GIVEN UNDER MY HAND AND SEAL THIS 13 DAY OF July, 2017.

NOTARY PUBLIC MY COMMISSION EXPIRES 5/20/19

LISA N. LINDSEY NOTARY PUBLIC STATE AT LARGE ALABAMA

MARCIA HENDLEY NOTARY PUBLIC STATE OF ALABAMA

OWNER: LAKEVIEW PARK PROPETIES, LLC

BY: MARTY BYROM - PARTNER

STATE OF ALABAMA
COUNTY OF Shelby

I, THE UNDERSIGNED, A NOTARY PUBLIC IN AND FOR SAID COUNTY, IN SAID STATE, HEREBY CERTIFY THAT MARTY BYROM, WHOSE NAME IS SIGNED TO THE FOREGOING CERTIFICATE AS OWNER OF LAKEVIEW PARK PROPERTIES, LLC, AND WHO IS KNOWN TO ME, ACKNOWLEDGE BEFORE ME ON THIS DATE THAT BEING DULY INFORMED OF THE CONTENTS OF SAID CERTIFICATE, HE EXECUTED THE SAME VOLUNTARILY, FOR AND AS THE ACT OF SAID CORPORATION.

GIVEN UNDER MY HAND AND SEAL THIS 10th DAY OF July, 2017.

NOTARY PUBLIC MY COMMISSION EXPIRES November 29, 2017

MORTGAGEE: SOUTH POINT BANK

BY: Ted Wood

ITS: LCO

STATE OF ALABAMA
COUNTY OF Jefferson

I, THE UNDERSIGNED, A NOTARY PUBLIC IN AND FOR SAID COUNTY, IN SAID STATE, HEREBY CERTIFY THAT Ted Wood, WHOSE NAME IS SIGNED TO THE FOREGOING CERTIFICATE AS OFFICER FOR SOUTH POINT BANK, MORTGAGE, AND WHO IS KNOWN TO ME, ACKNOWLEDGE BEFORE ME ON THIS DATE THAT BEING DULY INFORMED OF THE CONTENTS OF SAID CERTIFICATE, HE EXECUTED THE SAME VOLUNTARILY, FOR AND AS THE ACT OF SAID CORPORATION.

GIVEN UNDER MY HAND AND SEAL THIS 10th DAY OF July, 2017.

NOTARY PUBLIC MY COMMISSION EXPIRES 11-15-17

CITY CLERK, CITY OF HOOVER DATE: 7/17/17

CHAIRMAN, PLANNING & ZONING COMMISSION DATE: 6-1-17

HOOVER CITY ENGINEER DATE: 7-13-17

CITY OF HOOVER NOTES:

1. NORTH ARROW BASED ON ALABAMA WEST STATE PLANE COORDINATES.
2. ALL EASEMENTS ON THIS MAP ARE FOR PUBLIC UTILITIES, SANITARY SEWERS, STORM SEWERS, STORM DITCHES, AND MAY BE USED FOR SUCH PURPOSES TO SERVE THE PROPERTY BOTH WITHIN AND WITHOUT THE SUBDIVISION. CITY OF HOOVER IS NOT RESPONSIBLE FOR THE MAINTENANCE OF ANY EASEMENTS SHOWN ON THIS PLAT OUTSIDE OF THE PUBLIC RIGHT-OF-WAY.
3. CONTRACTOR AND/OR DEVELOPER ARE RESPONSIBLE FOR PROVIDING BUILDING SITES FREE OF DRAINAGE PROBLEMS.
4. NO FURTHER SUBDIVISION OF ANY PARCEL SHOWN HEREON SHALL BE ALLOWED WITH OUT THE PRIOR APPROVAL OF THE CITY OF HOOVER PLANNING COMMISSION.
5. SUBJECT PROPERTY LIES IN ZONE "X" OUTSIDE OF 100 YEAR FLOOD PLAIN AS SHOWN ON FIRM PANEL 01117C0087E, DATED FEBRUARY 20, 2013.
6. PARKING SPACES AS SHOWN IS FROM DESIGN PLANS, PAINT STRIPPING IS NOT COMPLETE AT TIME OF SURVEY.
7. DETAILS FOR CONDOMINIUM UNITS 100, 150, & 200 OF BUILDING 23 PHASE I, WERE TAKEN FROM ARCHITECTURAL PLANS BY CHARLES F. SMITH DATED APRIL 24, 2017 AND ALL SQUARE FOOTAGE WAS TAKEN FROM THE ARCHITECTURAL PLANS.
8. SEE ARCHITECTURAL PLANS ON SHEET 2 AND 3 FOR DETAIL CONDOMINIUM DIMENSIONS.

REVISIONS

U:\PROJECTS\BYROO001-Inverness Office Park\Survey\Cad\Dwg\BYROO001 IN PHASE 1 REVISION MAS.dwg

DRAWN BY: MBA
CHECKED BY: RKC
PROJECT No.: BYROO001
CAD FILE: BYROO001
SCALE: 1"=30'

PROJECT: LAKE HEATHER OFFICES AT INVERNESS
TITLE: PHASE 1

120 BISHOP CIRCLE, SUITE 300
PELHAM, AL 35124
TEL - (205) 403-9158
FAX - (205) 403-9175

EDG
ENGINEERING DESIGN GROUP, LLC
CIVIL ENGINEERING • LAND SURVEYING
(205) 403-9158

SHEET NO.
1 OF 3

Map Book 48 Page 13 B

20170718000256120 2/3 $37.00
Shelby Cnty Judge of Probate, AL
07/18/2017 09:05:15 AM FILED/CERT

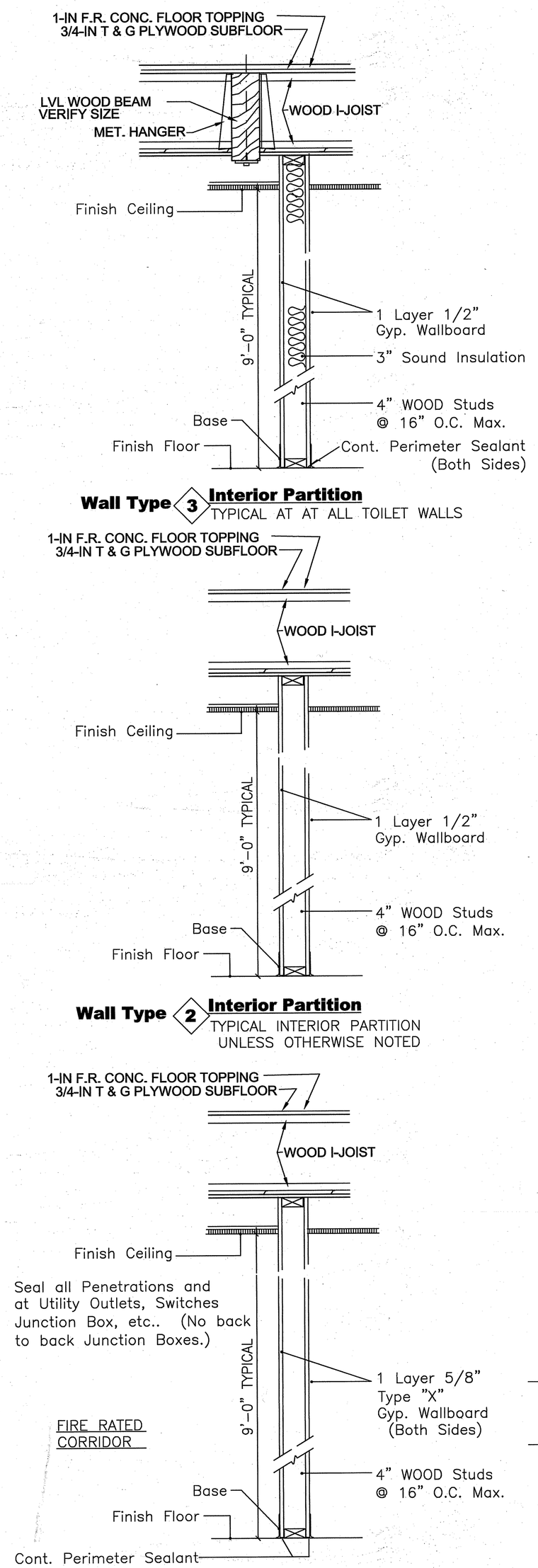

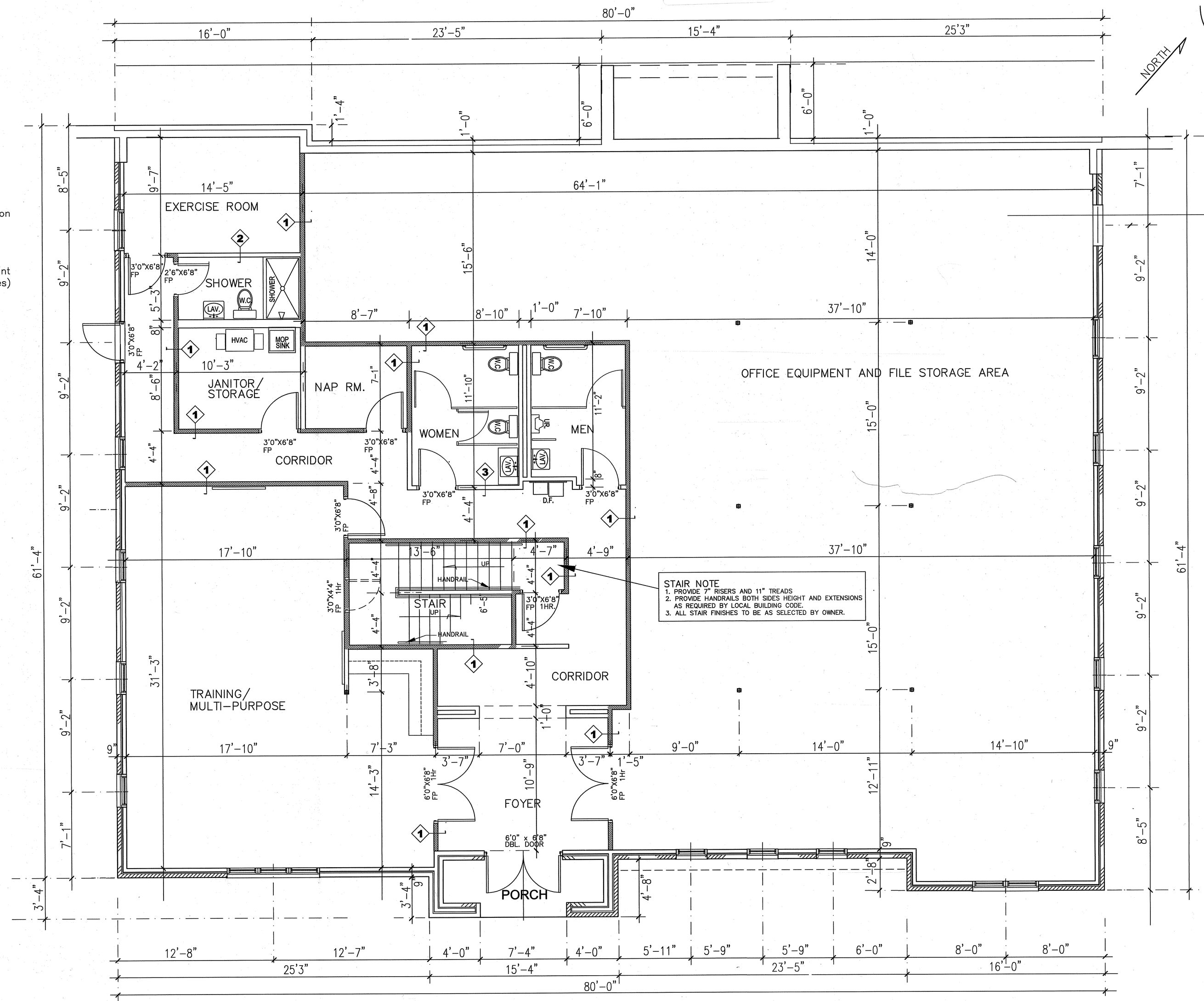

STAIR NOTE
1. PROVIDE 7" RISERS AND 11" TREADS
2. PROVIDE HANDRAILS BOTH SIDES HEIGHT AND EXTENSIONS AS REQUIRED BY LOCAL BUILDING CODE.
3. ALL STAIR FINISHES TO BE AS SELECTED BY OWNER.

NOTE: SEE FLOOR PLAN DRAWINGS T-1 AND T-2 FOR FIRE RATED WALLS
NOTE: DIVIDING PARTITION BETWEEN TENANTS IS A ONE-HOUR FIRE WALL (UL U304)

FIRST FLOOR PLAN BUILDING (A)

scale: 1/4"=1'-0"

GRAPHIC SCALE

FLOOR PLAN REVISIONS 5/30/17

BUILDING A

SHEET NO. T-1

STATE OF ALABAMA
CHARLES F. SMITH
REG. NO. 2150
REGISTERED ARCHITECT

CHARLES F. SMITH
architect
Birmingham, Alabama
(205) 933-8481

A NEW OFFICE BUILDING AT
INVERNESS OFFICE PARK
INVERNESS CENTER PKWY HOOVER, ALABAMA

FIRST FLOOR PLAN
5/30/2017

NO.	DATE	REVISION	BY
1			CFS
2			
3			

000Byron2017\OPBLDG_A\OP_Bldg_A_T1st_a.dwg

Map Book 48 Page 13 C

20170718000250120 $7.00
Shelby Cnty Judge of Probate, AL
07/18/2017 09:05:15 AM FILED/CERT

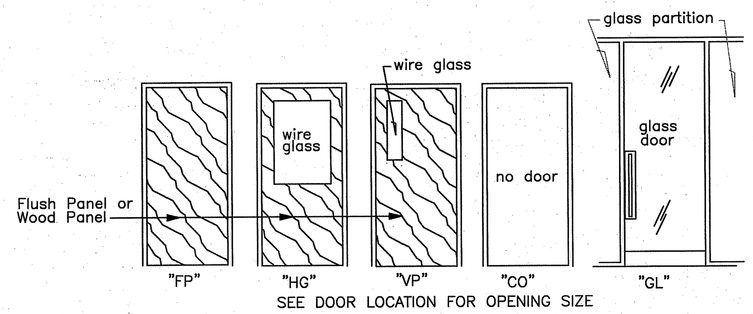

DOOR TYPES

NOTES:
1. DOOR STYLE AND DESIGN INCLUDING HARDWARE TO BE AS SELECTED BY OWNER.
2. ALL DOORS LOCATED IN ONE HOUR RATED WALLS TO BE FIRE RATED DOOR AND FRAME AS REQUIRED.
3. DOORS IN GLASS PARTITIONS TO BE SLIDING TYPE AND FURNISHED BY GLASS PARTITION MANUFACTURER.
4. GLASS PARTITIONS TO BE FULL HEIGHT TO CEILING PARTITION STYLE (FRAMED, UNFRAMED, GLASS TYPE, ETC.) TO BE AS SELECTED BY OWNER.

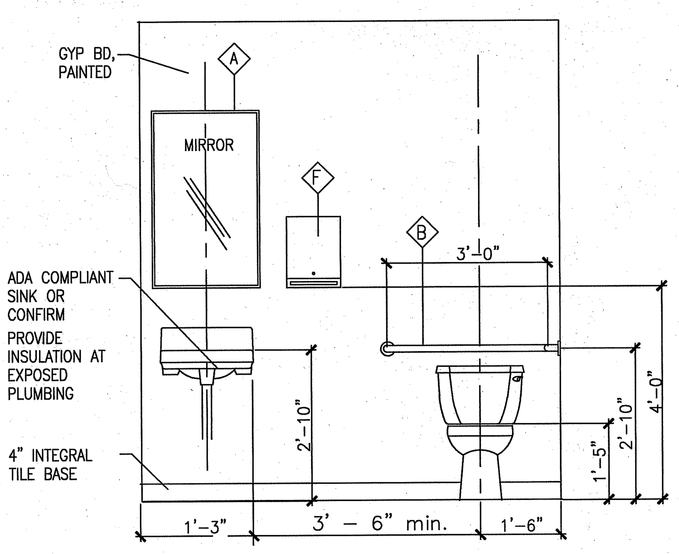

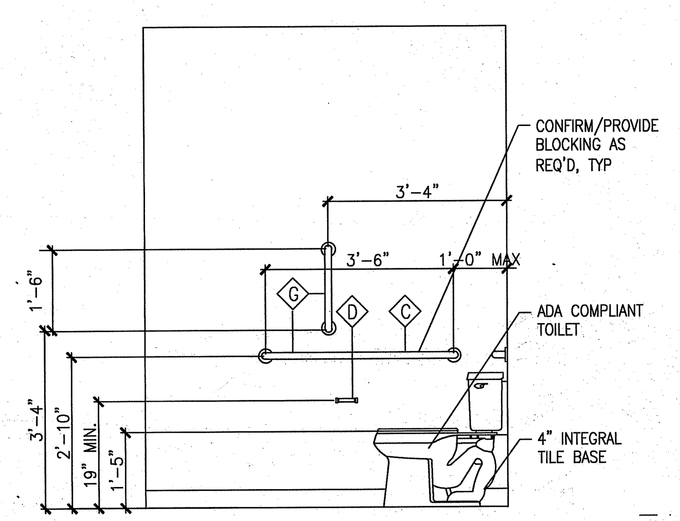

H.C. TOILET ACCESSORIES

LOCATE TOILET ACCESSORIES AS SHOWN ABOVE

TOILET ACCESSORIES		
KEY	ITEM	MANUFACTURER/MODEL #/DESCRIPTION
A	MIRROR	24"x40" FRAMELESS MIRROR
B	ADA GRAB BAR	36" HORIZ SURFACE-MOUNTED GRAB BAR
C	ADA GRAB BAR	42" HORIZ SURFACE-MOUNTED GRAB BAR
D	TOILET PAPER HOLDER	SURFACE-MOUNTED TOILET TISSUE DISPENSER - PROVIDED BY PAPER SUPPLIER
E		
F	PAPER TOWEL HOLDER	WALL-MOUNTED PAPER TOWEL DISPENSER
G	ADA GRAB BAR	18" VERT SURFACE-MOUNTED GRAB BAR

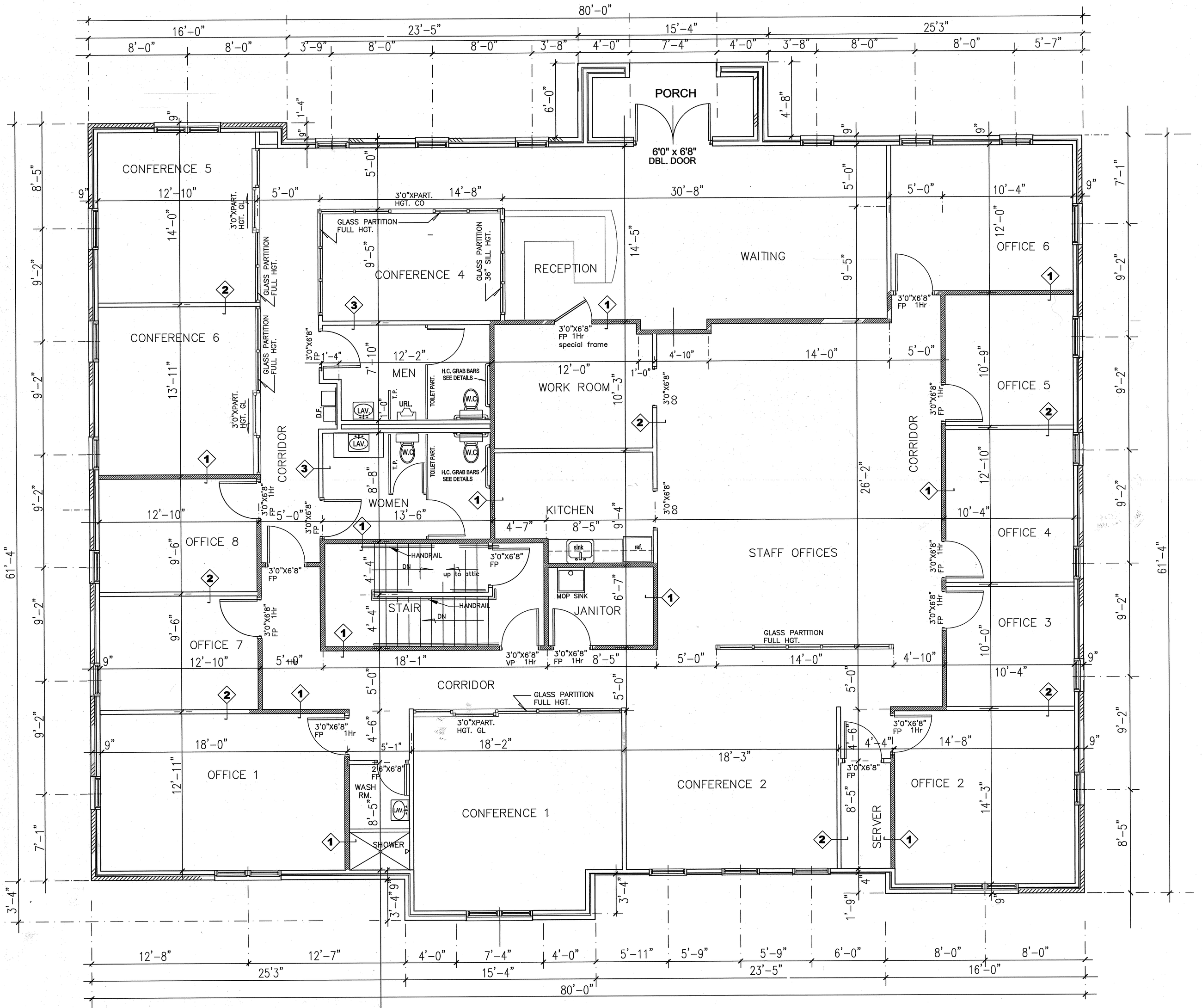

SECOND FLOOR PLAN BUILDING A

FLOOR PLAN REVISIONS 5/24/17

GRAPHIC SCALE

BUILDING A

SHEET NO. T2

STATE OF ALABAMA
CHARLES F. SMITH
REG. NO. 2150
REGISTERED ARCHITECT

CHARLES F. SMITH
architect
Birmingham, Alabama
(205) 933-8481

A NEW OFFICE BUILDING AT
INVERNESS OFFICE PARK
INVERNESS CENTER PKWY HOOVER, ALABAMA

SECOND FLOOR PLAN
5/24/2017

NO.	DATE	REVISION	BY
1			CS
2			
3			
4			
5			

...00Byron2017\IOPBLDG_A\IOP_Bldg_A_T2nd.dwg