Map Book 50 Page 86A

20190410000118010 1/4 $72.00
Shelby Cnty Judge of Probate, AL
04/10/2019 03:55:34 PM FILED/CERT

LAKE HEATHER OFFICES AT INVERNESS PHASE 2

AN OFFICE CONDOMINIUM DEVELOPMENT

SITUATED ON LOT 1A, ACCORDING TO LAKE HEATHER OFFICES AT INVERNESS PHASE 1 RECORDED IN MAP BOOK 48, PAGE 13, IN THE PROBATE OFFICE OF SHELBY COUNTY ALABAMA.
ALSO
SITUATED IN THE NORTHWEST 1/4 OF THE SOUTHWEST 1/4 OF SECTION 36, TOWNSHIP 18 SOUTH, RANGE 2 WEST, SHELBY COUNTY, ALABAMA.

PURPOSE OF THIS RESURVEY IS TO ESTABLISH THE EXISTENCE AND RIGHTS OF BUILDING No. 19 AND THE UNITS THEREIN.

Prepared by:

CARR & ASSOCIATES ENGINEERS, INC.
153 CAHABA VALLEY PARKWAY
PELHAM, ALABAMA 35124
PHONE (205) 664-8498 FAX (205) 664-9685
CADD FILE: 23-375 Byrom Lake Heather Offices at Inverness.dwg
CADD OPERATOR: BBY
JANUARY 2019

PHASE TWO BUILDING DETAIL

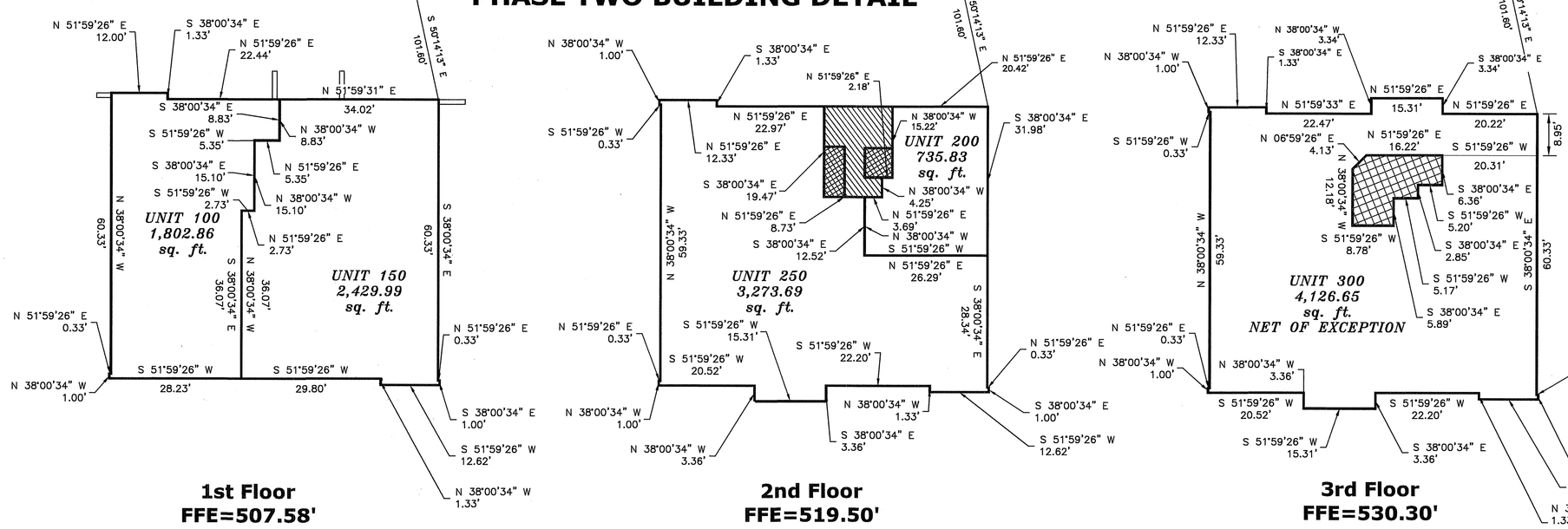

1st Floor
FFE=507.58'

2nd Floor
FFE=519.50'

3rd Floor
FFE=530.30'

BUILDING 19 DATA
TOTAL SQUARE FEET
12,369.02

PARKING SPACES
134 REGULAR
5 HANDICAP
139 TOTAL SPACES

LIMITED COMMON ELEMENT EXCLUSIVE TO UNIT NO. 300

LIMITED COMMON ELEMENTS FOR THE USE OF UNITS 200, 250 AND 300

20 0 20 40
Scale 1" = 20'

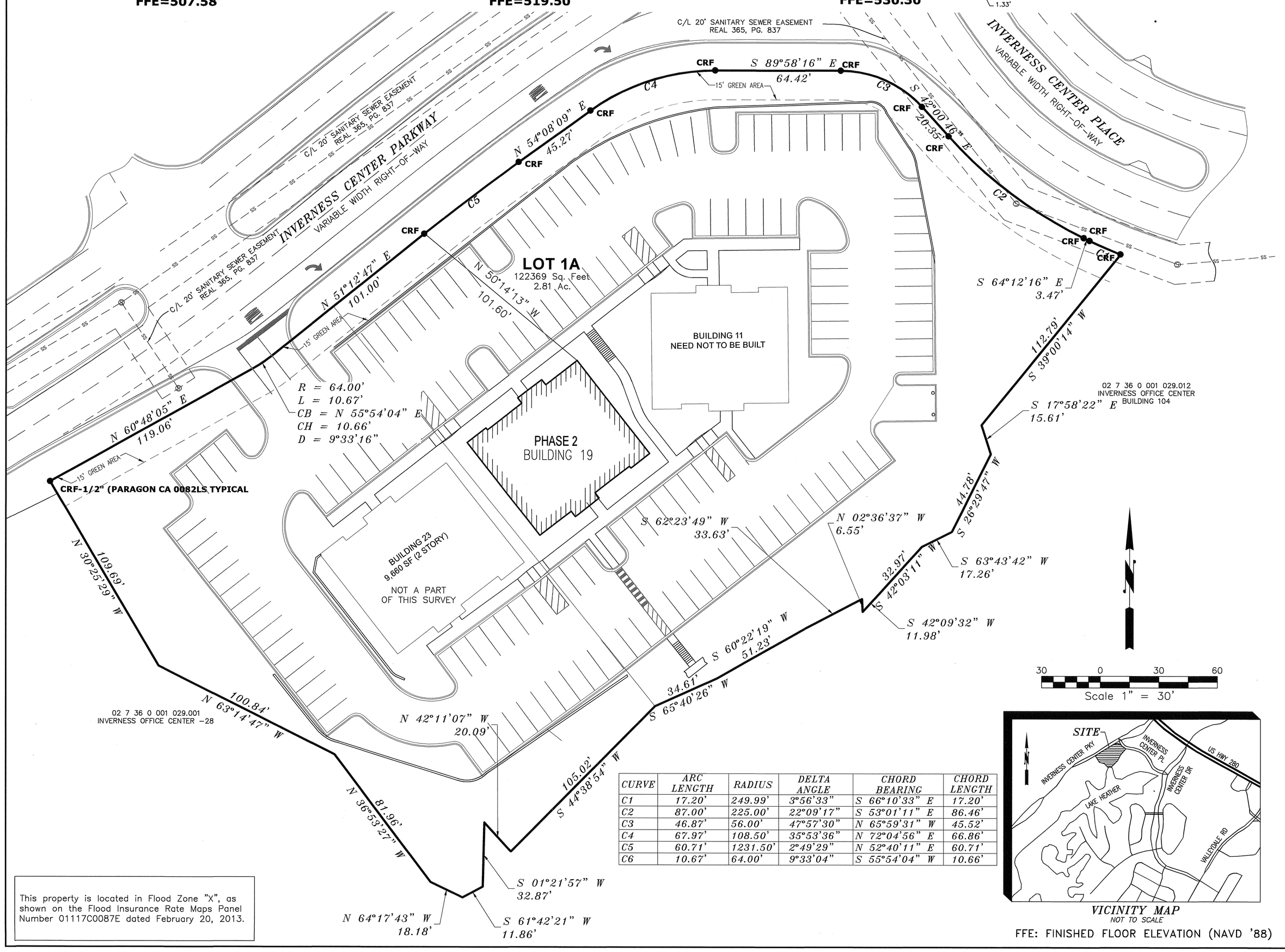

30 0 30 60
Scale 1" = 30'

CURVE	ARC LENGTH	RADIUS	DELTA ANGLE	CHORD BEARING	CHORD LENGTH
C1	17.20'	249.99'	3°56'33"	S 66°10'33" E	17.20'
C2	87.00'	225.00'	22°09'17"	S 53°01'11" E	86.46'
C3	46.87'	56.00'	47°57'30"	N 65°59'31" W	45.52'
C4	67.97'	108.50'	35°53'36"	N 72°04'56" E	66.86'
C5	60.71'	1231.50'	2°49'29"	N 52°40'11" E	60.71'
C6	10.67'	64.00'	9°33'04"	S 55°54'04" W	10.66'

VICINITY MAP
NOT TO SCALE

This property is located in Flood Zone "X", as shown on the Flood Insurance Rate Maps Panel Number 01117C0087E dated February 20, 2013.

FFE: FINISHED FLOOR ELEVATION (NAVD '88)

STATE OF ALABAMA
COUNTY OF JEFFERSON

The undersigned, Barton F. Carr, a registered land surveyor in the State of Alabama, and Lakeview Park Properties, LLC, as Owner, hereby certify that this plat or map was made pursuant to a survey made by said surveyor and that said survey and this plat or map were made at the instance of said owner; that this plat or map is a true and correct map of lands shown therein and known as "*LAKE HEATHER OFFICES AT INVERNESS - PHASE 2*", that this plat contains all information required by Ala. Code § 35-8A-209 and the Units depicted herein are substantially completed, showing the subdivisions into which it is proposed to divide said lands, giving the length and angles of the boundaries of each lot and its number, showing the streets, alleys and public grounds, giving the length, width and name of each street, as well as the number of each lot and block, and showing the relations of the lands to Resurvey of Inverness Office Center Site - 8 , as recorded in MB. 47, PG. 76, in the probate office of shelby county, alabama; and that iron pins have been installed at all lot corners and curve points as shown and designated by small solid circles on said plat or map. said owner dedicates street, alleys, public grounds and easement as shown by said plat or map. said owner also certifies that he is the owner of said lands and that the same are subject to a mortgage held by SouthPoint Bank. Said surveyor also certifies that all parts of this survey and plat or map were prepared in accordance with the current requirements of the standards of practice for surveying in the state of Alabama to the best of my knowledge, information and belief.

Barton F. Carr
AL. Reg. No. 16685 Date: 4/8/19

ALABAMA REGISTERED No. 16685 PROFESSIONAL LAND SURVEYOR BARTON F. CARR

By: Marty Byrom Date: 4/9/19
Lakeview Park Properties, LLC. - Owner
MARTY BYROM AS
Printed Name

By: Jim Maples Date: 4/10/19
Jim Maples, Senior Vice President
South Point Bank - Mortgagee

STATE OF ALABAMA
COUNTY OF SHELBY

I, the undersigned, a Notary Public in and for said county and state, do hereby certify that Barton F. Carr, whose name is signed to the foregoing certificate as surveyor, and who is known to me, acknowledged before me, on this date, that after being duly informed of the contents of said certificate, does execute same voluntarily as such individuals with full authority thereof.

Given under by hand and seal this the 8 day of April, 2019.

Celeia Coker My Commission Expires 9-1-2019
Notary Public

STATE OF ALABAMA
COUNTY OF Alabama

I, the undersigned, a Notary Public in and for said county and state, do hereby certify that Marty Byrom, whose name is signed to the foregoing certificate for the owner of Lakeview Park Properties, LLC, and who is known to me, acknowledged before me, on this date, that after being duly informed of the contents of said certificate, does execute same voluntarily as such individuals with full authority thereof.

Given under by hand and seal this the 9 day of April 2019

Marcia Herlihy My Commission Expires 11-20-21
Notary Public

STATE OF ALABAMA
COUNTY OF Alabama

I, the undersigned, a Notary Public in and for said county and state, do hereby certify that Jim Maples, whose name is signed to the foregoing certificate as Senior Vice President of SouthPoint Bank, Mortgagee, and who is known to me, acknowledged before me, on this date, that after being duly informed of the contents of said certificate, does execute same voluntarily as such individuals with full authority thereof.

Given under by hand and seal this the 10 day of April 2019

Marcia Herlihy My Commission Expires 11-20-21
Notary Public

Map Book 50 Page 86B

20190410000118010 $74.$72.00
Shelby Cnty Judge of Probate, AL
04/10/2019 03:55:34 PM FILED/CERT

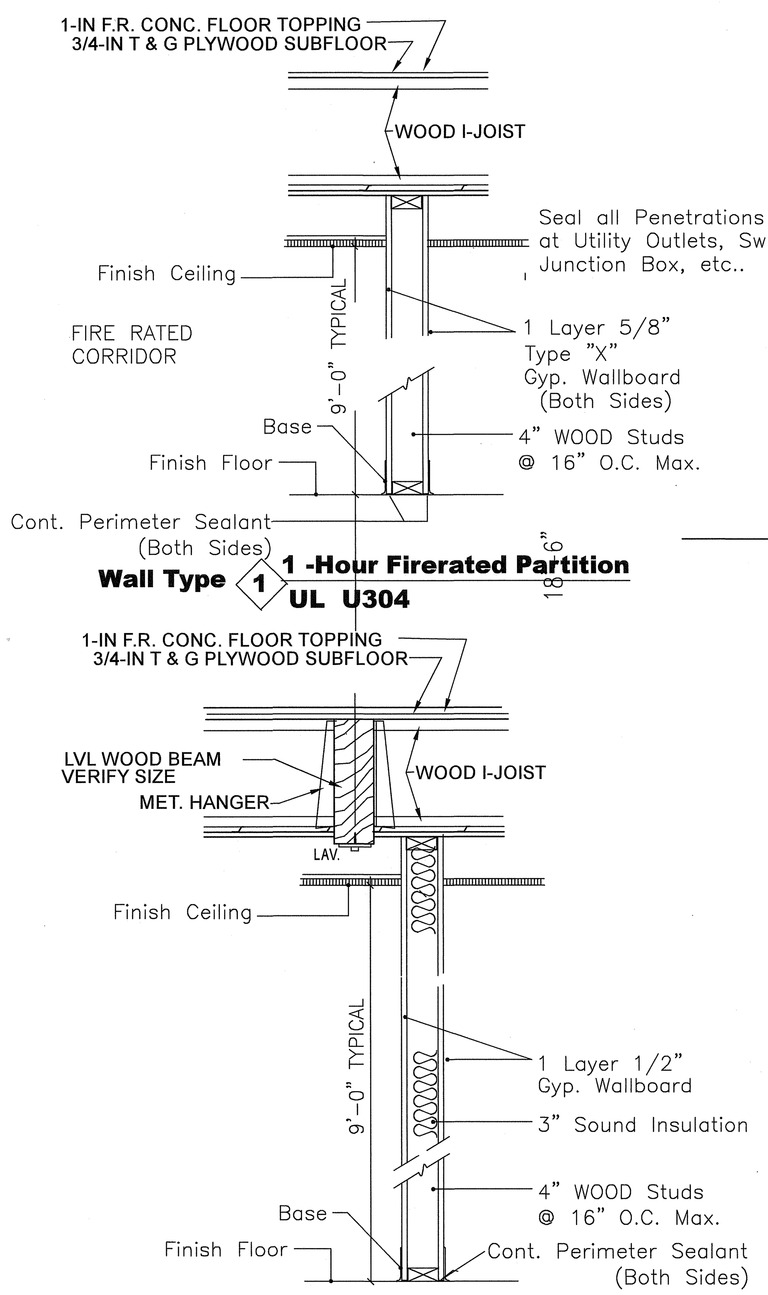

Wall Type 1 **1 -Hour Firerated Partition**
UL U304

Wall Type 3 **Interior Partition**
TYPICAL AT AT ALL TOILET WALLS

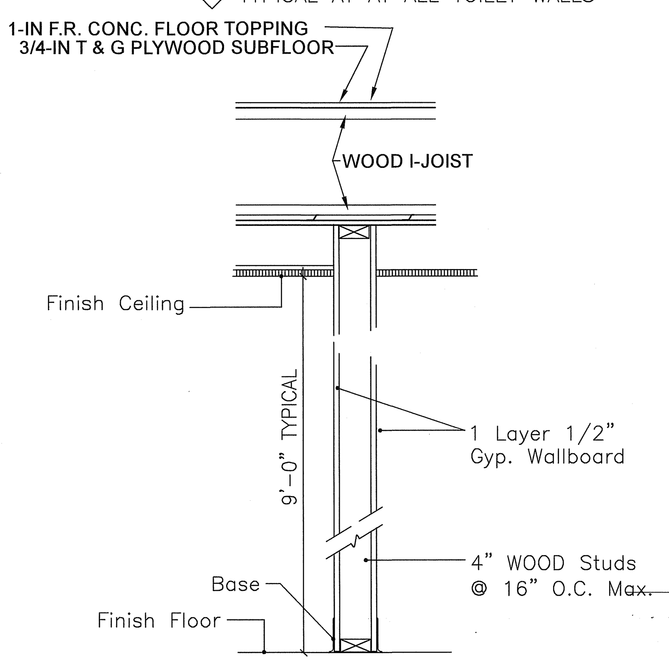

Wall Type 2 **Interior Partition**
TYPICAL INTERIOR PARTITION UNLESS OTHERWISE NOTED

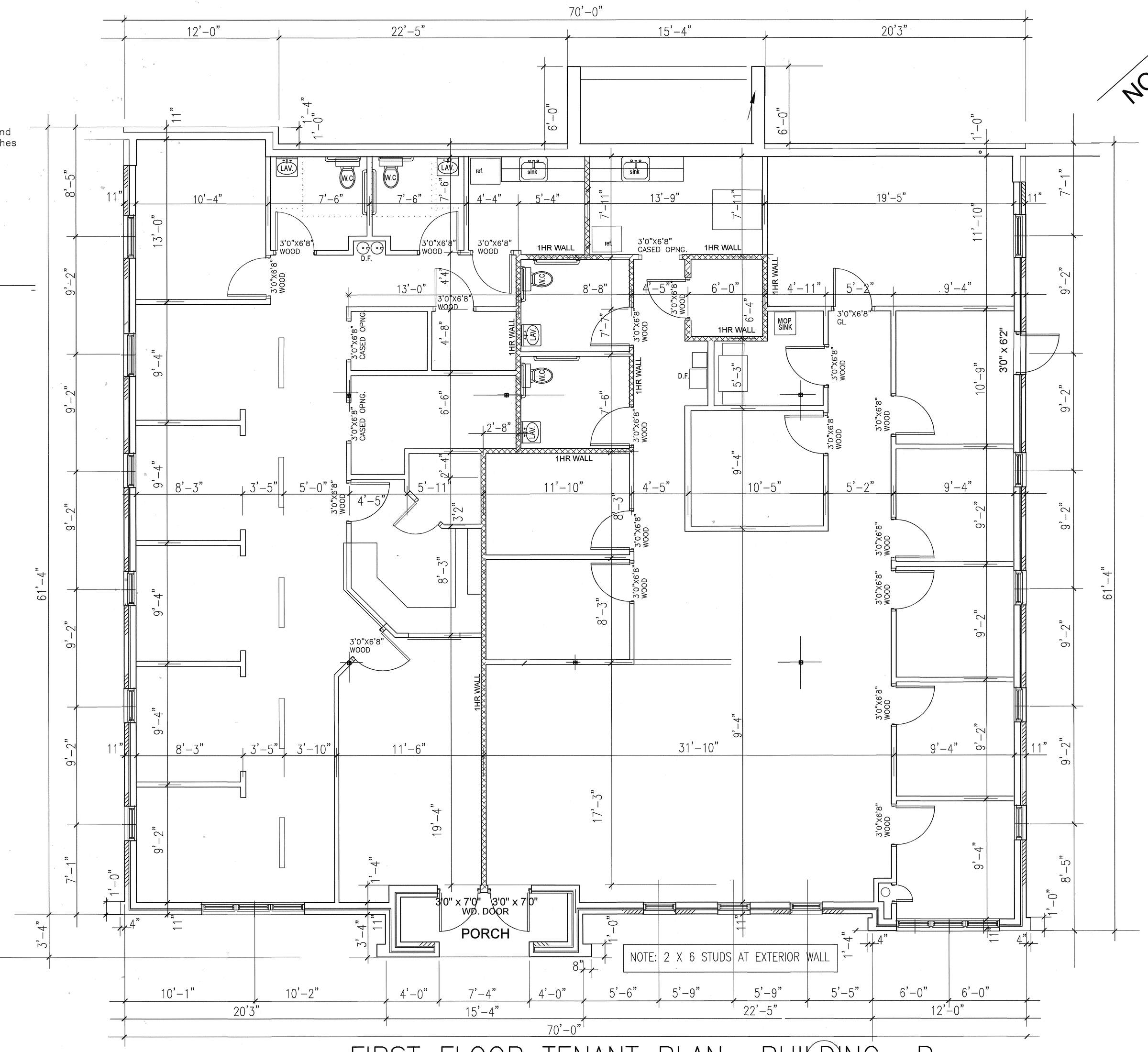

FIRST FLOOR TENANT PLAN BUILDING B

GRAPHIC SCALE

STATE OF ALABAMA
CHARLES F. SMITH
REG. NO. 2150
REGISTERED ARCHITECT

CHARLES F. SMITH
architect
Birmingham, Alabama (205) 933-8481

A NEW OFFICE BUILDING AT
INVERNESS OFFICE PARK
INVERNESS CENTER PKWY HOOVER, ALABAMA

FIRST FLOOR TENANT PLAN
11/12/2018

NO.	DATE	REVISION	BY
1			cs
2			
3			

BUILDING B

SHEET NO. A2B

SHEET 2 OF 4

Map Book 50 Page 86C

20190410000180010 3/4 $72.00
Shelby Cnty Judge of Probate, AL
04/10/2019 03:55:34 PM FILED/CERT

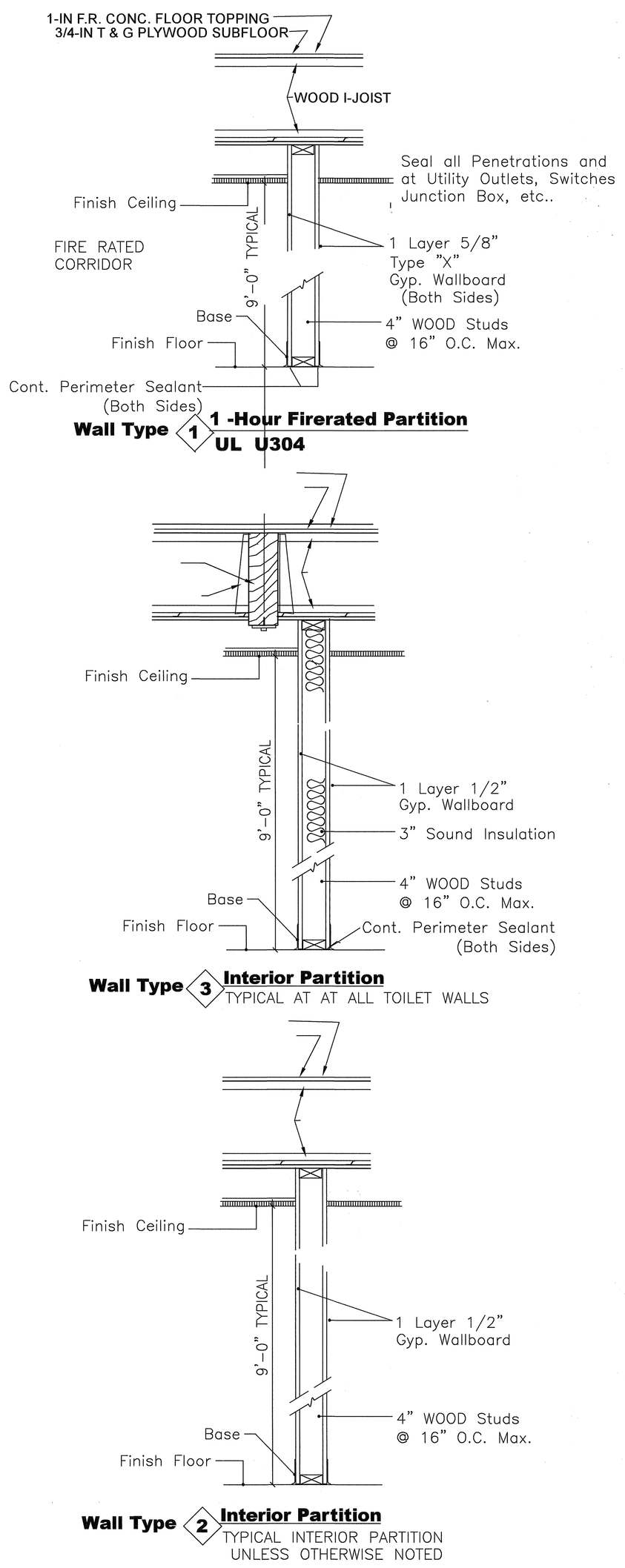

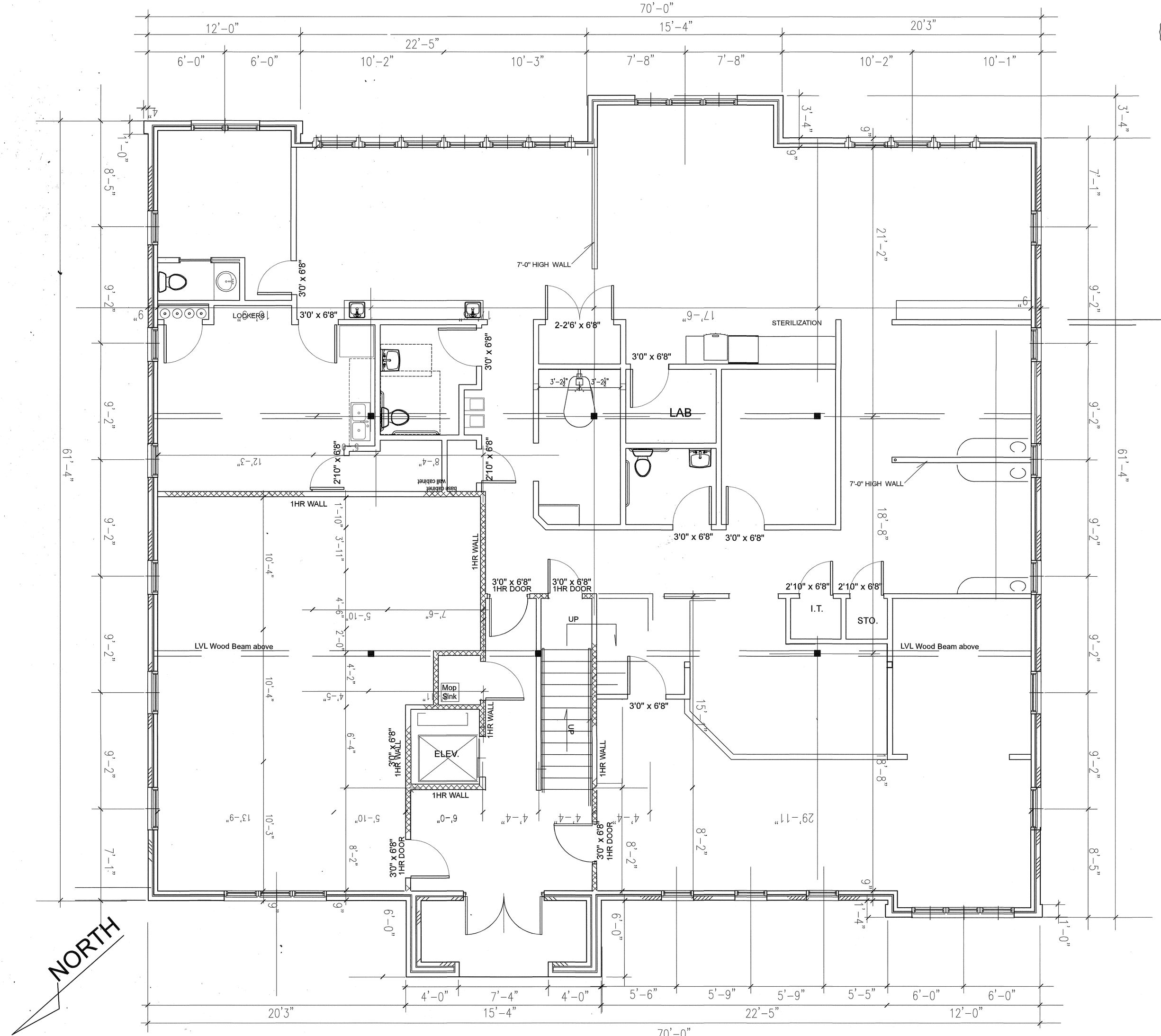

SECOND FLOOR PLAN BUILDING B

SCALE: 1/4" = 1-0"

GRAPHIC SCALE

NOTICE: COORDINATE ALL WALLS AND DOOR LOCATIONS WITH EXISTING ROUGH-IN WALLS AND DENTAL EQUIPMENT DRAWINGS.

SEE DENTAL EQUIPMENT DRAWINGS FOR ALL EQUIPMENT AND FURNISHINGS.

STATE OF ALABAMA
CHARLES F. SMITH
REG. NO. 2150
REGISTERED ARCHITECT

CHARLES F. SMITH
architect
Birmingham, Alabama
(205) 933-8481

A NEW OFFICE BUILDING AT
INVERNESS OFFICE PARK
INVERNESS CENTER PKWY HOOVER, ALABAMA

SECOND FLOOR PLAN
10/21/2018

NO.	DATE	REVISION	BY
1			CS
2			
3			

BUILDING B SUITE 200

SHEET 3 OF 4

SHEET NO. T-1

Map Book 50 Page 86D

20190410000118010 $/4 $72.00
Shelby Cnty Judge of Probate, AL
04/10/2019 03:55:34 PM FILED/CERT

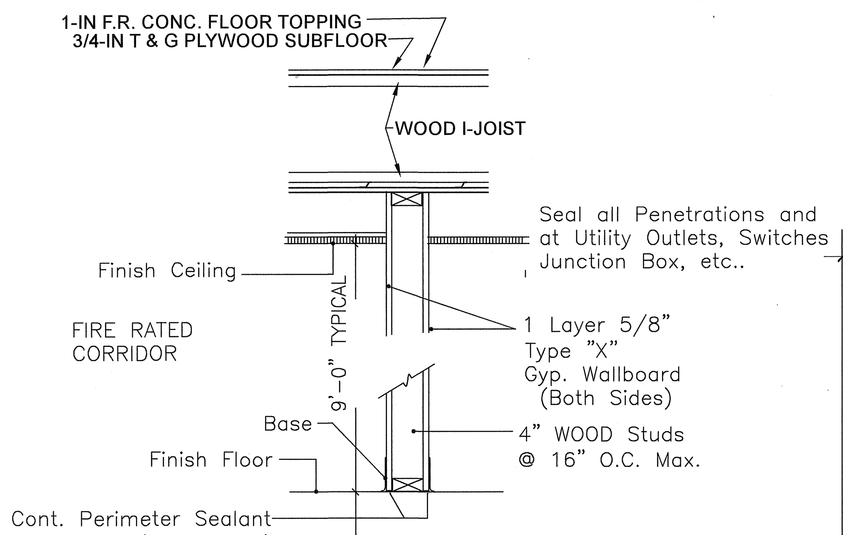

Wall Type 1 — 1 -Hour Firerated Partition UL U304

NOTE: SEE FLOOR PLAN DRAWINGS T-1 AND T-2 FOR FIRE RATED WALLS
NOTE: DIVIDING PARTITION BETWEEN TENANTS IS A ONE-HOUR FIRE WALL (UL U304)

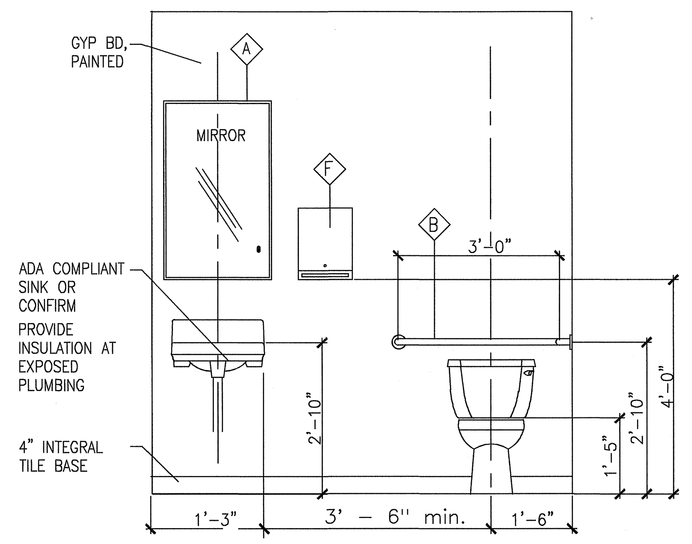

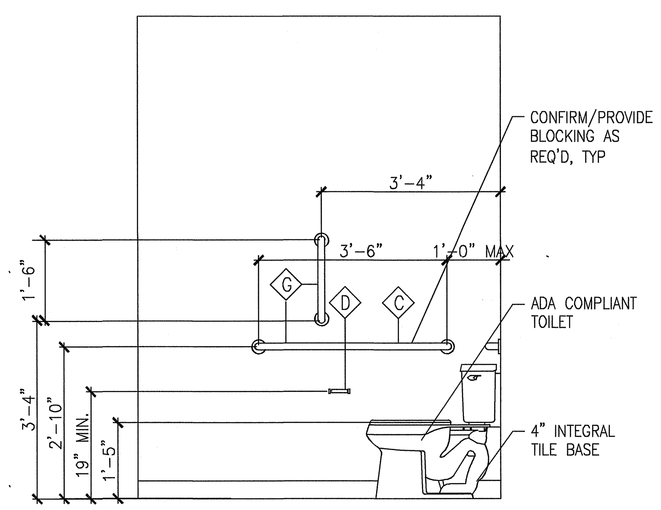

H.C. TOILET ACCESSORIES

LOCATE TOILET ACCESSORIES AS SHOWN ABOVE

TOILET ACCESSORIES

KEY	ITEM	MANUFACTURER/MODEL #/DESCRIPTION
A	MIRROR	24"x40" FRAMELESS MIRROR
B	ADA GRAB BAR	36" HORIZ SURFACE-MOUNTED GRAB BAR
C	ADA GRAB BAR	42" HORIZ SURFACE-MOUNTED GRAB BAR
D	TOILET PAPER HOLDER	SURFACE-MOUNTED TOILET TISSUE DISPENSER - PROVIDED BY PAPER SUPPLIER
E		
F	PAPER TOWEL HOLDER	WALL-MOUNTED PAPER TOWEL DISPENSER
G	ADA GRAB BAR	18" VERT SURFACE-MOUNTED GRAB BAR

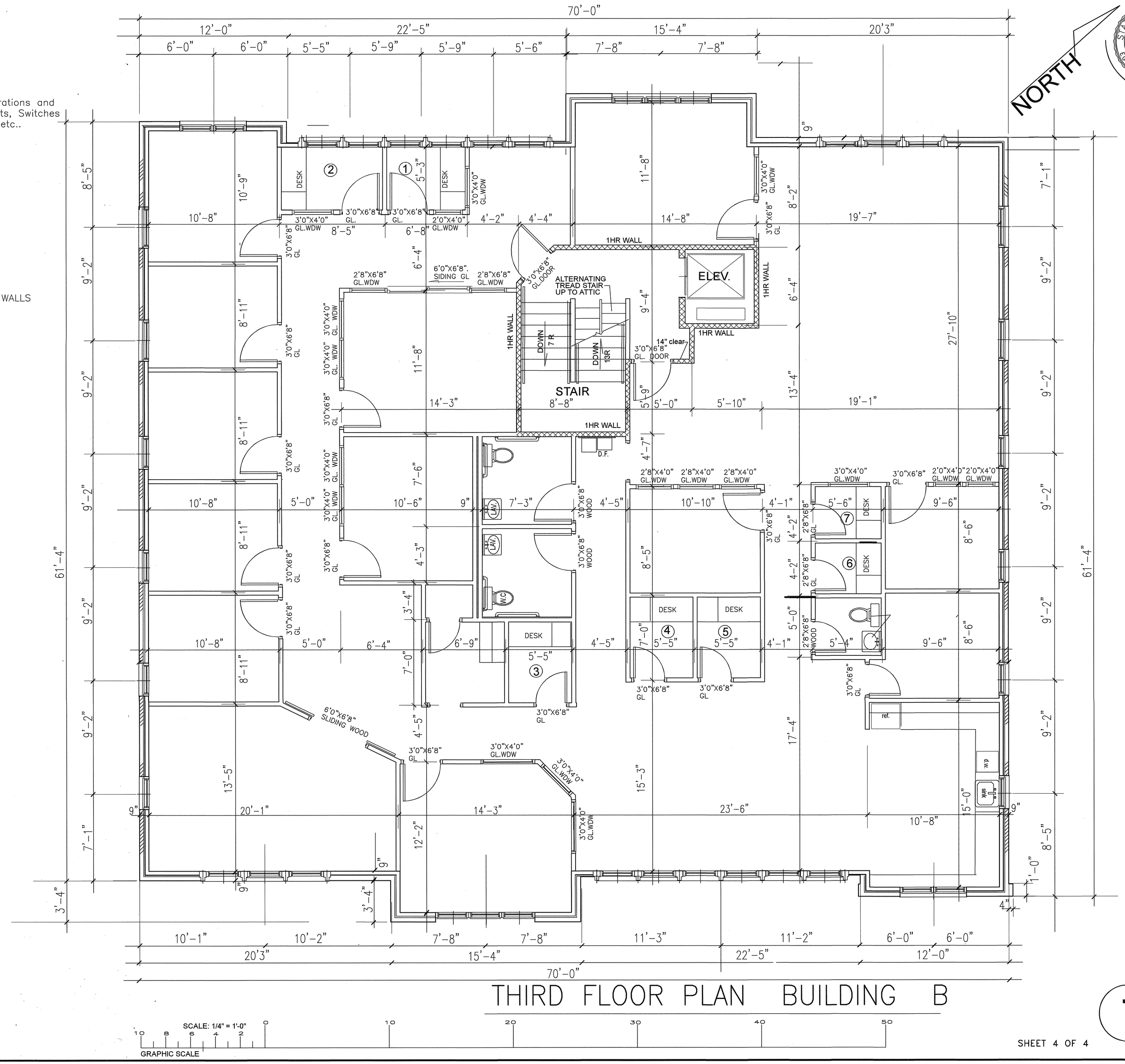

THIRD FLOOR PLAN BUILDING B

SCALE: 1/4" = 1'-0"
GRAPHIC SCALE

SHEET 4 OF 4

STATE OF ALABAMA
CHARLES F. SMITH
REG. NO. 2150
REGISTERED ARCHITECT

CHARLES F. SMITH
architect
Birmingham, Alabama (205) 933-8481

A NEW OFFICE BUILDING AT
INVERNESS OFFICE PARK
INVERNESS CENTER PKWY HOOVER, ALABAMA

THIRD FLOOR TENANT PLAN
5/09/2018

NO.	DATE	REVISION	BY
1			CS
2			
3			

SHEET NO.
T3